THIS DOCUMENT IS THE PROPERTY OF SELECT CONTROLS INCORPORATED AND IS CONVEYED WITH THE EXPRESS CONDITION THAT IT AND THE INFORMATION CONTAINED IN IT ARE NOT TO BE USED, DISCLOSED, OR REPRODUCED IN WHOLE OR IN PART, FOR ANY PURPOSE WITHOUT THE EXPRESS WRITTEN CONSENT OF SELECT CONTROLS INCORPORATED AND THAT NO RIGHT IS GRANTED TO DISCLOSE OR USE ANY INFORMATION CONTAINED IN SAID DOCUMENT.

REVISIONS				
ALT	DESCRIPTION	BY	CHK	ENG
A	REVISED PER GULFSTREAM REQUEST	H.J. 5-92		

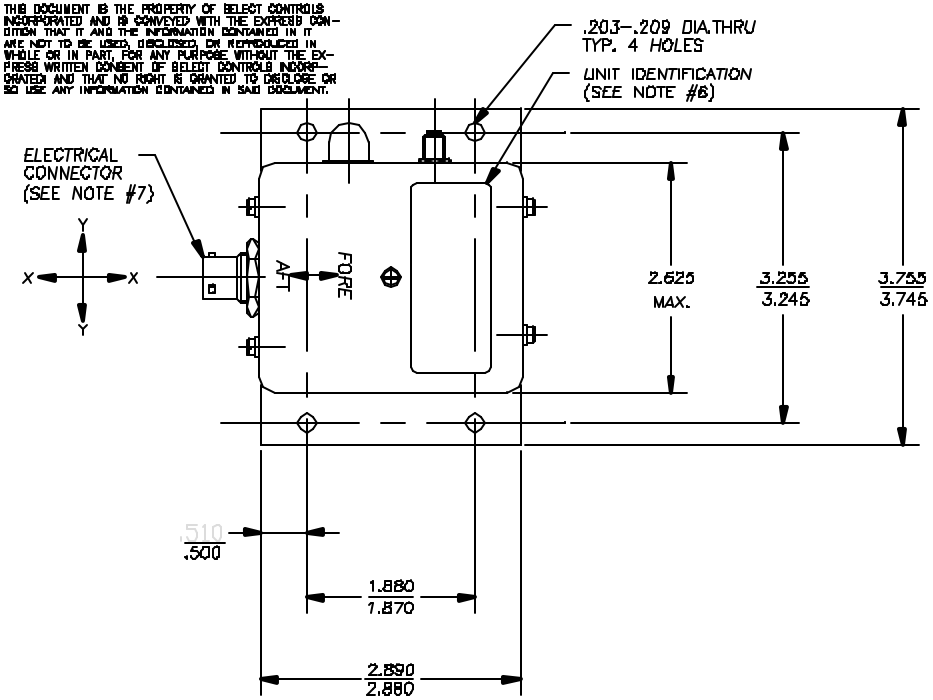

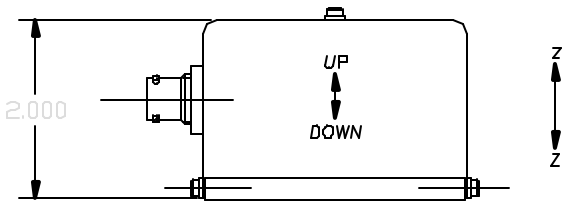

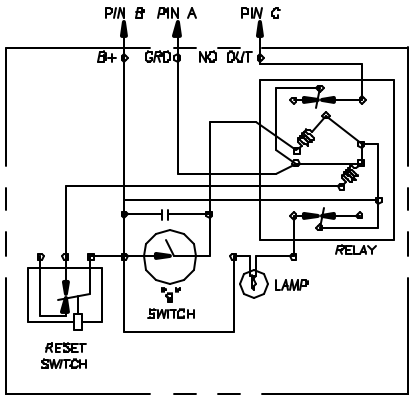

CIRCUIT SCHEMATIC

(SHOWN AFTER OPERATION OF RESET SWITCH)

NOTE:
1. WEIGHT: 300 GRAMS MAX.
2. OPERATING VOLTAGE: 28 +/- 4 VDC
3. OPERATION:
   a) OPERATION OF THE RESET SWITCH CLOSES THE N.C. RELAY CONTACTS SO THAT THE LAMP GOES "OFF" AND THE SWITCHED OUTPUT IS "OFF" (OPEN CIRCUIT)
   b) OPERATION OF THE "g" SWITCH CAUSES THE N.O. RELAY CONTACTS TO CLOSE (THE N.C. CONTACTS OPEN) SO THAT LAMP IS "ON" AND THE SWITCHED OUTPUT IS "ON" (CONNECTED TO GROUND).
4. LATCHING RELAY CHARACTERISTICS:
   a) TYPE: DOUBLE WINDING,PLASTIC SEALED
   b) CONTACTS: DPDT,BIFURCATED CROSS BAR, SILVER (AG) CONTACT.
   c) CONTACT RATING: 2.0 AMPERES RESISTIVE AT 24 VDC
      1.0 AMPERES INDUCTIVE AT 24 VDC
5. "g" SWITCH:
   a) HERMETICALLY SEALED; PLANAR
   b) INSENSITIVE ALONG Z-Z AXIS
   c) SWITCH CONTACTS CLOSE AT 2.5 "g" +/- 10% WHEN APPLIED IN ANY DIRECTION IN THE X-Y PLANE
6. UNIT IDENTIFICATION:
   NAMEPLATE SHALL INCLUDE:

   GULFSTREAM AEROSPACE CORP.

   IMPACT SWITCH

   P/N 1159 SCAV402-1

   S/N

   MFG. SELECT CONTROLS INC.

   CODE IDENT. 1J859

   MFG. P/N 2098-1-000
7. ELECTRICAL CONNECTOR: BENDIX P/N PT07-8-3PW

2098-1-000	
	A

ITEM NO.	NO. REQ'D	PART NO.	DESCRIPTION	REMARKS
BILL OF MATERIAL				

MATERIAL _____

FINISH _____

TITLE SWITCH, IMPACT

Select Controls Inc.
350 I CENTRAL AVE.
BOHEMIA, N.Y. 11716

NO. REQ'D	N/A	NO. REQ'D	N/A	SCALE 1=1	DRAWN A.J.	2-92	DRAWING NO. 2098-1-000	REV A
	—			WEIGHT NOTED	CHECKED			
					APPROVED			

DO NOT SCALE DRAWING
REMOVE BURRS, BREAK SHARP EDGES
TOLERANCE UNLESS SPECIFIED:
FRACTS ± 1/64 ANGLE ±0 30'
MACH FINISH DEC PLS ± .01
FINE DEC PLS ± .005